ITALTHERM

Fancoil



Why choose Italtherm fan coils?

COMFORT ALL YEAR ROUND
Soffio fan coils are designed to offer well-being in every season, both in heating and cooling mode. Perfect when combined with modern low-temperature systems, such as heat pumps, they guarantee constant comfort and high performance in any environment.

QUIETNESS AND EFFICIENCY
Thanks to the brushless DC motor, Soffio ensures modulating, smooth and silent operation. An ideal solution also for the sleeping area and for all spaces where acoustic comfort, energy saving and continuity of operation are essential.

HEALTHIER AIR AND DAILY WELL-BEING
Soffio helps improve indoor air quality by filtering the air reintroduced into the room. In cooling mode, it also performs a dehumidification function, helping to create a more balanced, pleasant and healthy climate.

MADE IN ITALY DESIGN AND PRODUCTION
With Soffio, Italtherm brings a solution that combines technology, elegance and Italian design care to residential and commercial environments. The essential and contemporary design integrates naturally into spaces.



SOFFIO DI ITALTHERM

The perfect synthesis between aesthetics & comfort.

SOFFIO CONSOLE

200 400 600 800





Floor standing
with feet kit (optional)



Low wall



Ceiling mounted

			400	600	800
Fan speed			nom	nom	nom
Total cooling capacity	(a)	kW	0,71	1,34	2,1	2,69
Total heating capacity	(b)	kW	0,84	1,65	2,56	3,1

SOFFIO WALL

400 600 800





Low wall installation



High wall installation

			400	600	800
Fan speed			nom	nom	nom
Total cooling capacity	(a)	kW	0,71	0,89	1,09
Total heating capacity	(b)	kW	0,99	1,37	1,68

SOFFIO WALL

1000 1200 1400





High wall installation
above door

			1000	1200	1400
Fan speed			nom	nom	nom
Total cooling capacity	(a)	kW	1,90	2,50	3,20
Total heating capacity	(b)	kW	2,62	3,40	4,30

SOFFIO BOX

200 400 600 800

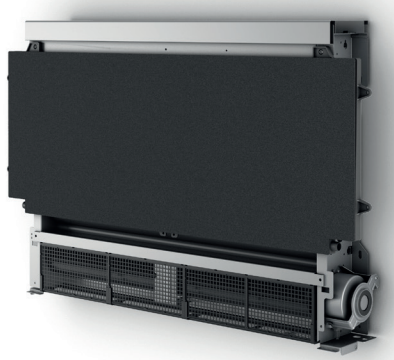



Wall recessed, with closing panel



False ceiling recessed, with grilles



Wall recessed, with grilles

			200	400	600	800
Fan speed			nom	nom	nom	nom
Total cooling capacity	(a)	kW	0,71	1,34	2,1	2,69
Total heating capacity	(b)	kW	0,84	1,65	2,56	3,1

SOFFIO BOX

1100 1400 1600





Wall recessed, with closing panel



False ceiling recessed, with grilles



Wall recessed, with grilles

			1100	1400	1600
Fan speed			nom	nom	nom
Total cooling capacity	(a)	kW	3,24	3,78	4,09
Total heating capacity	(b)	kW	4,06	4,53	4,87

(a) Cooling mode at standard conditions: air temperature 27°C d.b. 19°C w.b., water inlet temperature 7°C, water outlet temperature 12°C (b) Heating mode usage conditions 1: air temperature 20 °C d.b., 15 °C w.b. max, water inlet temperature 50 °C, water flow rate equal to that of cooling standard condition. (c) Heating mode standard conditions: air temperature 20 °C d.b., 15 °C w.b. max, water inlet temperature 45 °C, water outlet temperature 40 °C. (d) Sound pressure level valid for closed rooms with a volume of 100 m3, a reverberation time of 0.5 s, and wall installation, sound emission on a 1/2 sphere at a distance of 3 metres. (E) Eurovent certified data.(f) Air flow rate measured with clean filters

SOFFIO CONSOLE

200 400 600 800



Reversible hydronic console fancoil with various installation possibilities: floor-mounted with feet, low wall-mounted and high wall-mounted, featuring DC brushless technology. Designed to guarantee heating, cooling, dehumidification, and air filtration in a single compact and elegant solution.

Available in 4 different power sizes with:

- **HEATING** from 0.9 to 3.4 kW with system water at 45 °C
- **COOLING** from 0.8 to 3.3 kW with system water at 7 °C



Floor-mounted with feet kit (optional) | Low wall-mounted | Ceiling-mounted

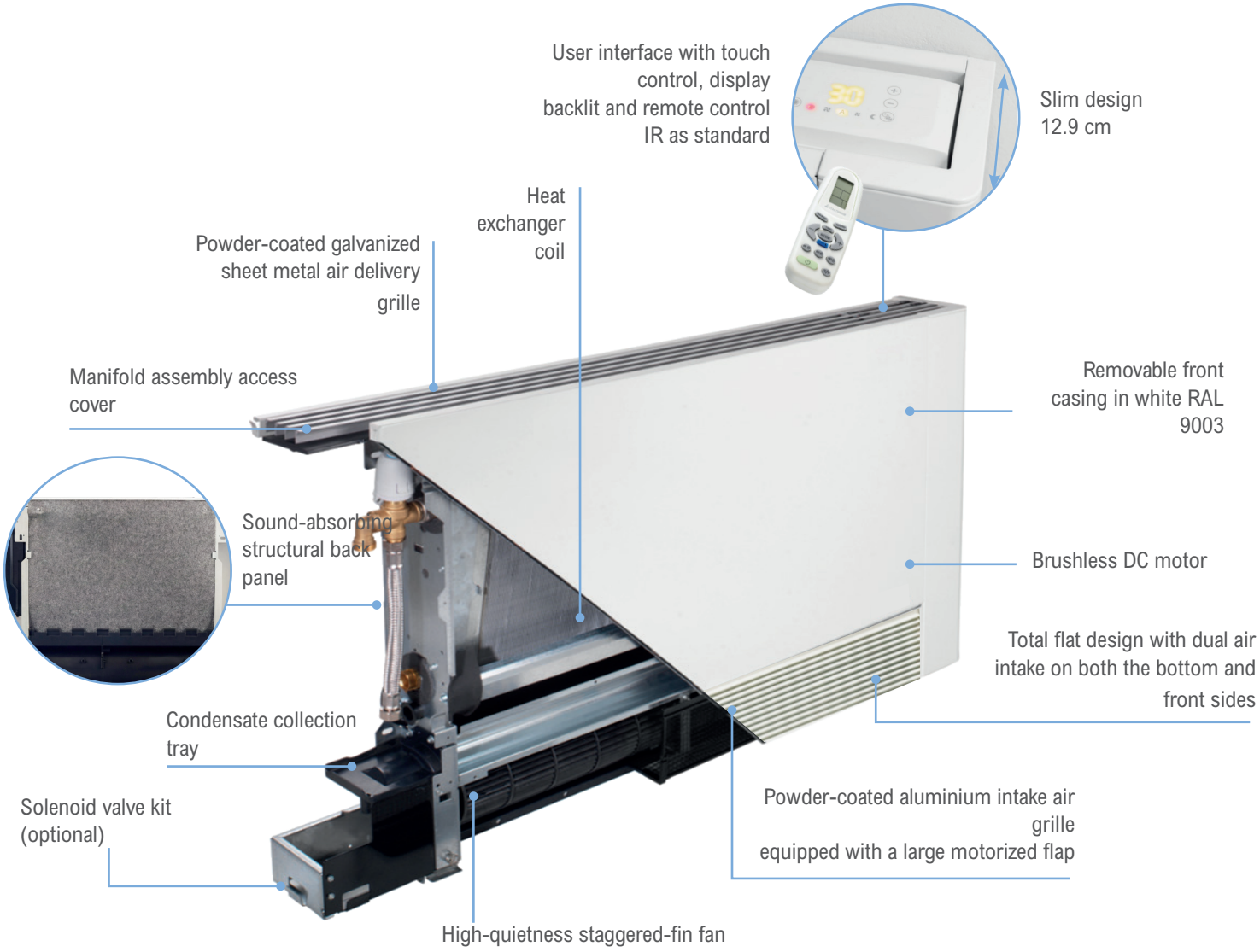



TECHNICAL DATA

Fan speed			200			400			600			800		
			min	nom	max	min	nom	max	min	nom	max	min	nom	max
Total cooling capacity	(a)	kW	0,38	0,71	0,82	0,91	1,34	1,74	1,5	2,1	2,54	1,98	2,69	3,29
Sensible cooling capacity	(a)	kW	0,26	0,5	0,64	0,65	1,02	1,25	1,1	1,56	1,94	1,54	2,09	2,54
Pressure drop water side	(a)	kPa	3,8	10,6	13,1	2,4	5,5	8,2	7,5	14,2	19	7,3	13,8	18,7
Total heating capacity	(b)	kW	0,64	0,84	1,05	1,25	1,65	2,31	1,75	2,56	3,12	2,21	3,1	4,1
Pressure drop water side	(b)	kPa	3,2	8,8	10,9	2	4,6	6,8	6,2	11,8	15,8	6,1	11,5	15,5
Total heating capacity in heating mode	(c)	kW	0,54	0,7	0,88	1,06	1,39	1,94	1,46	2,14	2,6	1,85	2,6	3,44
Water-side pressure drop	(c)	kPa	5,7	8,8	12,2	2,9	4,8	7,9	5,8	11,8	16	4,1	8,9	14,2
Power input		W	5	7	11	6	9	19	7	11	20	8	12	24
Sound power Lw (A)		dB(A)	38	45	52	39	46	53	41	47	53	42	48	54
Dimensions (WxHxD)		mm	697x579x129			897x579x129			1097x579x129			1297x579x129		
Weight		kg	11,5			13			15,5			18,5		

SOFFIO WALL

400 600 800



Wall-mounted fan coil designed to guarantee high performance with one of the lowest noise levels in its category. It stands out for its excellent ratio between output power and compact dimensions. It can be installed as a high wall-mounted split or as a low wall-mounted console.

Available in 3 different power sizes with:
- **HEATING** from 1.4 to 2.5 kW with system water at 45 °C
- **COOLING** from 1.0 to 1.82 kW with system water at 7 °C



Low **wall-mounted** High **wall-mounted**

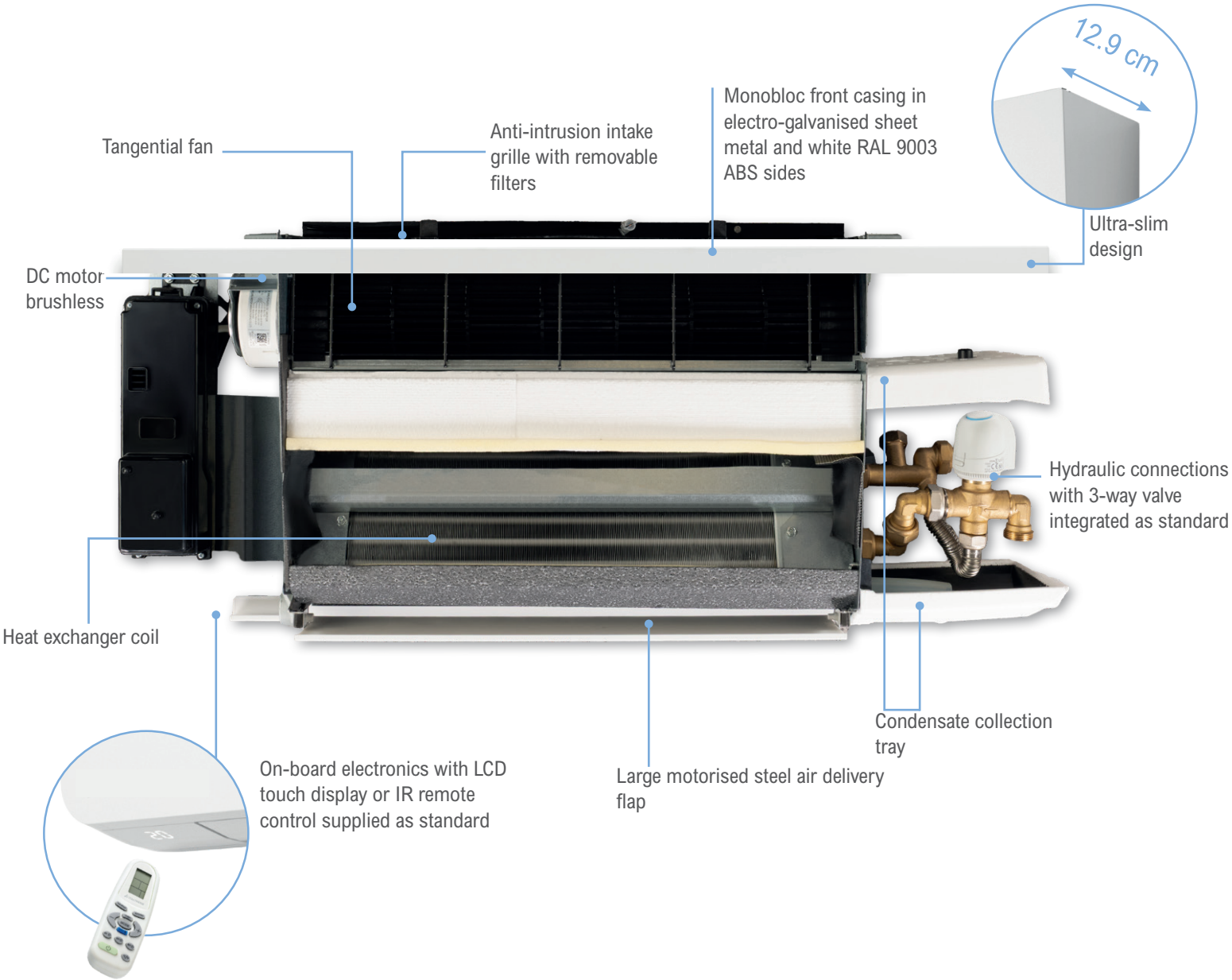



TECHNICAL DATA

Fan speed			400			600			800		
			min	nom	max	min	nom	max	min	nom	max
Total cooling capacity	(a)	kW	0,52	0,71	1,01	0,69	0,89	1,23	0,77	1,09	1,82
Sensible cooling capacity	(a)	kW	0,42	0,59	0,91	0,58	0,80	1,15	0,65	0,95	1,47
Water-side pressure drop	(a)	kPa	2,8	5,2	8,9	4,9	6	7,9	2,1	4,8	11
Total heating capacity	(b)	kW	0,67	0,99	1,55	0,98	1,37	2,16	1,14	1,68	2,85
Water-side pressure drop	(b)	kPa	2,4	4,5	7,1	1,9	2,9	2,5	2,0	4,6	8,8
Total heating capacity	(c)	kW	0,58	0,86	1,40	0,86	1,20	1,90	0,99	1,45	2,50
Water-side pressure drop	(c)	kPa	3,4	6,7	11,6	6,7	11,9	5,4	8,5	16,4	15,3
Power input		W	7	11	19	8	12	23	9	13	27
Sound power Lw (A)		dB(A)	43	49	57	43	50	58	43	50	58
Dimensions (LxHxD)		mm	906x380x129			1106x380x129			1306x380x 129		
Weight		kg	13			14,5			16		

SOFFIO WALL

1000 1200 1400

Wall-mounted fan coil designed to guarantee high performance
with one of the highest quietness levels in its category.
It stands out for an excellent ratio between power delivered and compact dimensions.

Available in 3 different power sizes with:
- **HEATING** from 2.91 to 4.59 kW with system water at 45 °C
- **COOLING** from 2.40 to 3.90 kW with system water at 7 °C





High wall-mounted

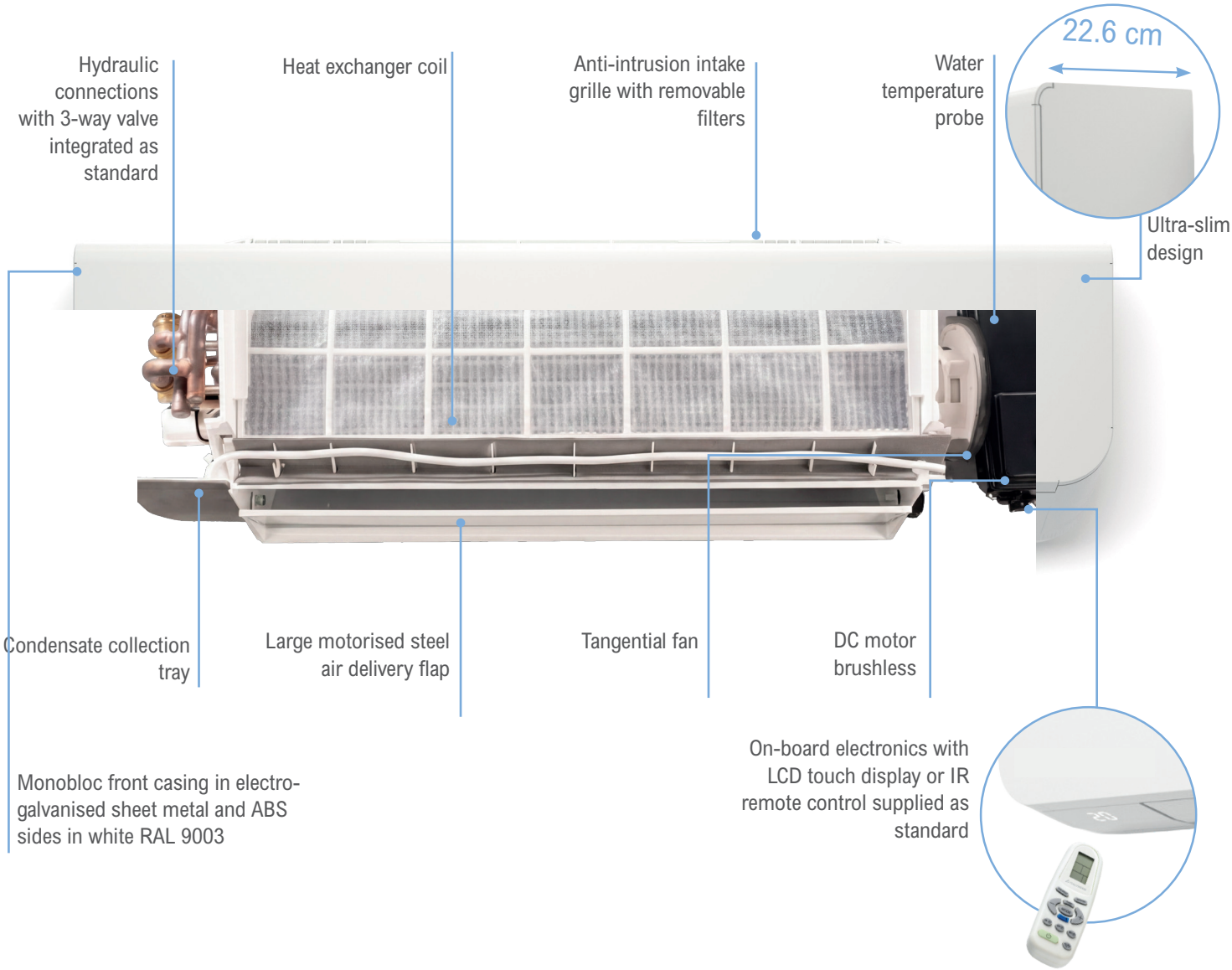



TECHNICAL DATA

Fan speed			1000			1200			1400		
			min	nom	max	min	nom	max	min	nom	max
Total cooling capacity	(a)	kW	1,10	1,90	2,40	1,90	2,50	3,10	2,20	3,20	3,90
Sensible cooling capacity	(a)	kW	0,91	1,55	1,98	1,62	2,10	2,59	1,86	2,68	3,33
Water-side pressure drop	(a)	kPa	7,2	19,4	32,4	14,8	24,2	36,8	19,1	39,1	58,2
Total heating capacity	(b)	kW	1,59	2,62	3,31	2,67	3,40	4,17	3,02	4,30	5,05
Water-side pressure drop	(b)	kPa	6,8	18,6	31,6	14,1	23,2	34,9	18,5	38,3	56,6
Total heating capacity	(c)	kW	1,43	2,37	2,91	2,30	2,94	3,61	2,62	3,72	4,59
Water-side pressure drop	(c)	kPa	10,0	28,1	42,9	21,0	33,9	50,1	27,2	52,9	80,1
Power input		W	8	15	22	9	14	21	11	23	38
Sound power Lw (A)		dB(A)	37	45	51	38	43	51	40	50	56
Dimensions (WxHxD)		mm	940x303x 226			940x303x 226			940x303x 226		
Weight		kg	11			12			12		

SOFFIO BOX

200 400 600 800



Wall recessed, with closing panel



Wall recessed, with grilles



False ceiling recessed, with grilles

Recessed fan coil designed to ensure maximum comfort with minimum visual impact. It integrates perfectly into domestic environments, becoming an elegant and discreet presence.

In the traditional version with a metal front panel, it is available with an ultra-thin casing of only 14.2 cm in thickness, ideal even for limited spaces.

Available in 4 different power sizes with:

- **HEATING** from 0.88 to 3.44 kW with system water at 45 °C
- **COOLING** from 0.82 to 3.29 kW with system water at 7 °C

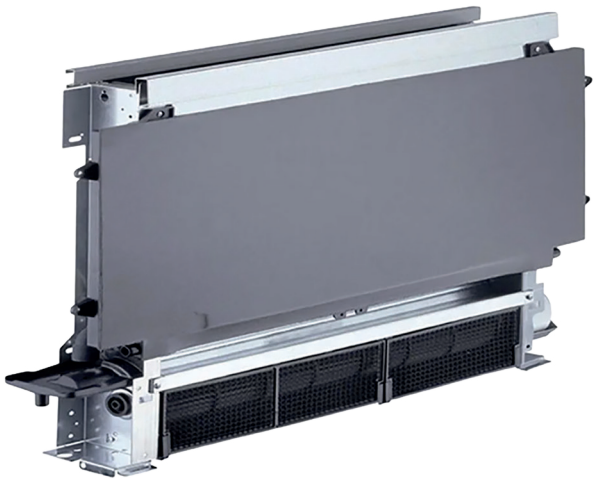

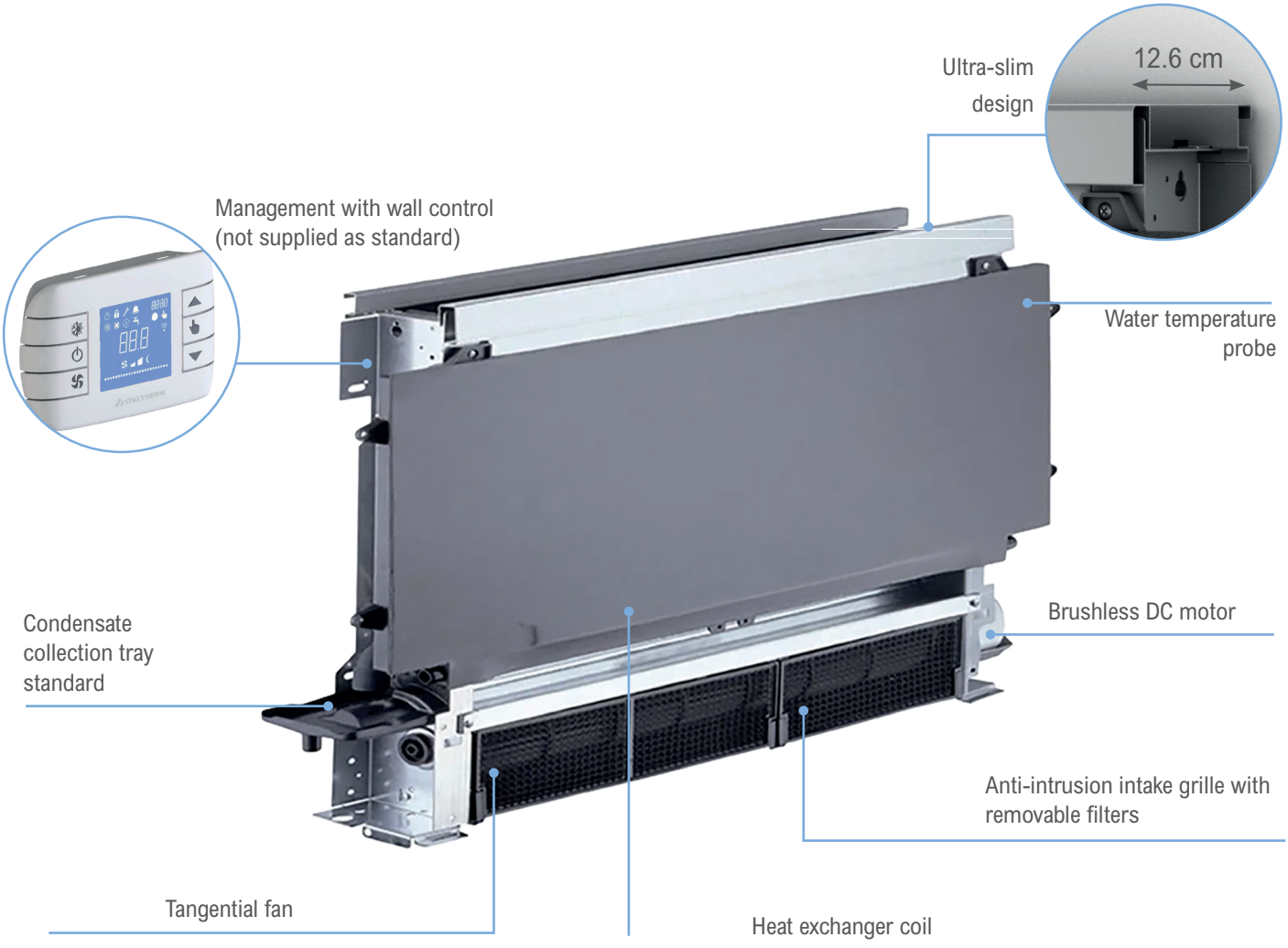



TECHNICAL DATA

Fan speed			200			400			600			800		
			min	nom	max	min	nom	max	min	nom	max	min	nom	max
Total cooling capacity cooling	(a)	kW	0,38	0,71	0,82	0,91	1,34	1,74	1,5	2,1	2,54	1,98	2,69	3,29
Sensible cooling capacity cooling	(a)	kW	0,26	0,5	0,64	0,65	1,02	1,25	1,1	1,56	1,94	1,54	2,09	2,54
Pressure drop water side	(a)	kPa	3,8	10,6	13,1	2,4	5,5	8,2	7,5	14,2	19	7,3	13,8	18,7
Total heating capacity heating	(b)	kW	0,64	0,84	1,05	1,25	1,65	2,31	1,75	2,56	3,12	2,21	3,1	4,1
Pressure drop water side	(b)	kPa	0,54	0,7	0,88	1,06	1,39	1,94	1,46	2,14	2,6	1,85	2,6	3,44
Total heating capacity heating	(c)	kW	5,7	8,8	12,2	2,9	4,8	7,9	5,8	11,8	16	4,1	8,9	14,2
Pressure drop water side	(c)	kPa	5	7	11	6	9	19	7	11	20	8	12	24
Power input		W	38	45	52	39	46	53	41	47	53	42	48	54
Sound power Lw (A)		dB(A)	43	49	57	43	50	58	43	50	58	37	45	51
Dimensions (WxHxD)		mm	525x576x 126			725x576x126			925x576x126			1125x576x126		
Weight		kg	7			9,5			11			14		

SOFFIO BOX

1100 1400 1600



Wall recessed, with closing panel



Wall recessed, with grilles



False ceiling recessed, with grilles

Recessed fancoil designed to guarantee maximum comfort with minimal visual impact. It integrates perfectly into domestic environments, becoming an elegant and discreet presence.

In the traditional version with a metal front panel, it is available with an ultra-thin casing of only 21.7 cm in thickness, ideal even for tight spaces.

Available in 4 different power sizes with:

- **HEATING** from 4.11 to 5.05 kW with system water at 45 °C
- **COOLING** from 3.85 to 4.85 kW with system water at 7 °C

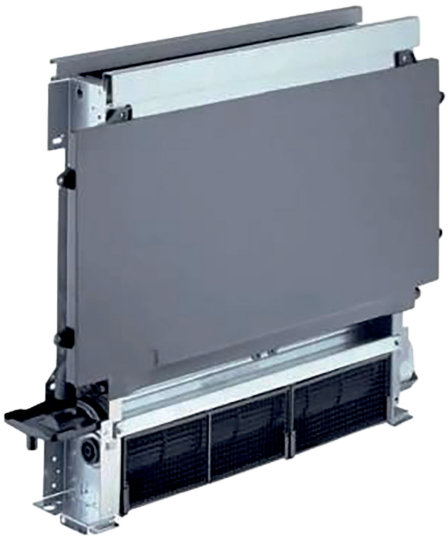



Ultra-slim design

Management with wall control (not supplied as standard)



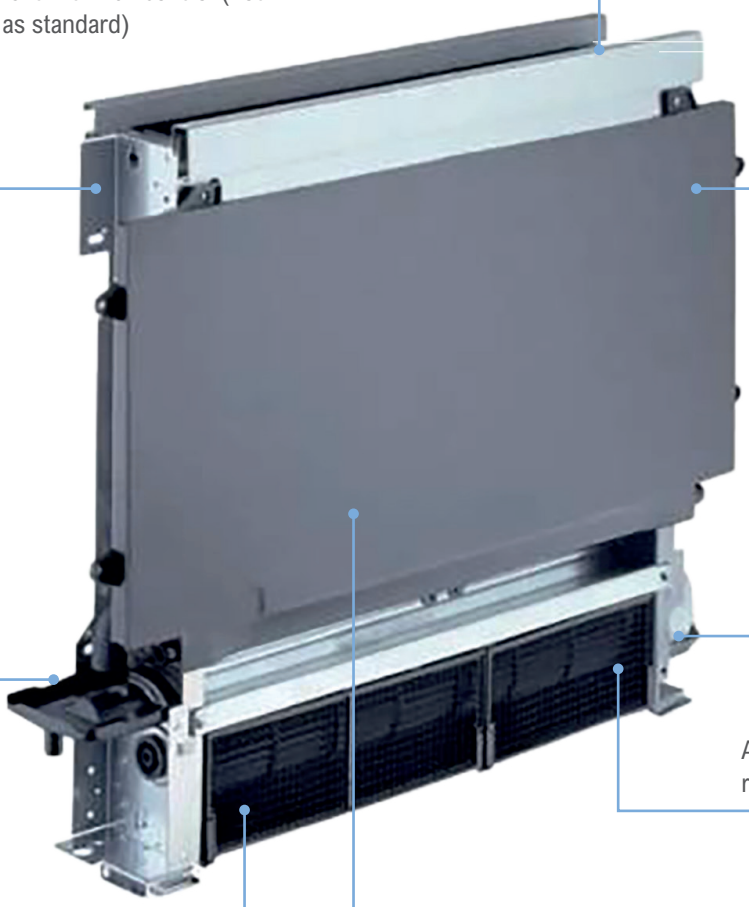

Water temperature probe

Condensate collection tray as standard

Brushless DC motor

Anti-intrusion intake grille with removable filters

Tangential fan

Heat exchanger coil



TECHNICAL DATA

Fan speed			1100			1400			1600		
			min	nom	max	min	nom	max	min	nom	max
Total cooling capacity	(a)	kW	2,43	3,24	3,85	3,05	3,78	4,45	3,28	4,09	4,85
Sensible cooling capacity	(a)	kW	1,78	2,41	2,93	2,14	2,69	3,2	2,3	2,9	3,5
Water-side pressure drop	(a)	kPa	13,9	23,7	32,6	19	27,8	37,2	20,9	30,8	41
Total heating capacity	(b)	kW	2,88	4,06	4,8	3,61	4,53	5,5	3,85	4,87	5,9
Water-side pressure drop	(b)	kPa	12,3	21,1	29,1	16,2	23,7	31,7	19,4	28,6	35,7
Total heating capacity	(c)	kW	2,6	3,4	4,11	3,07	3,87	4,7	3,28	4,16	5,05
Water-side pressure drop	(c)	kPa	14,3	23,5	33,3	17,1	25,8	35,5	20,2	30,8	38,8
Power input		W	6	13	26	6	13	26	10	15	29
Sound power Lw (A)		dB(A)	39	46	50	38	49	54	42	50	55
Dimensions (WxHxD)		mm	1110x599x198			1110x599x198			1180x599x198		
Weight		kg	17,5			18			19,5		

WALL RECESSED

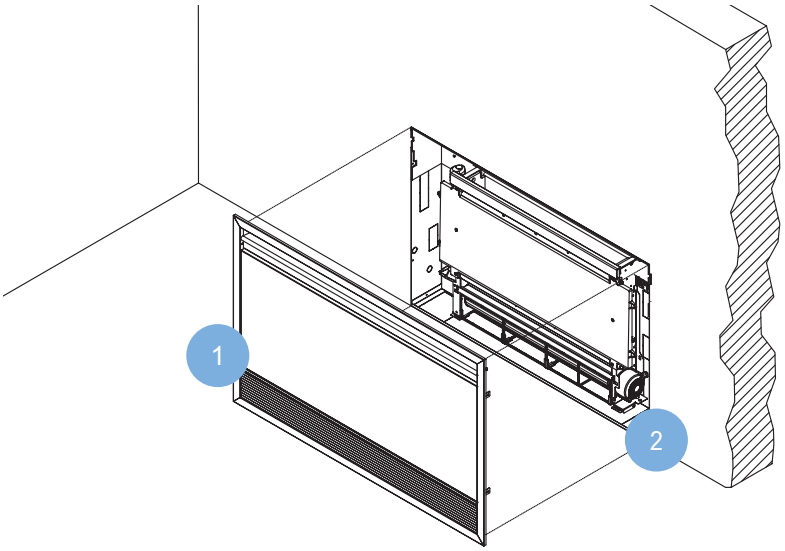

Soffio recessed box panel



Soffio recessed box kit



WALL RECESSED WITH GRILLES

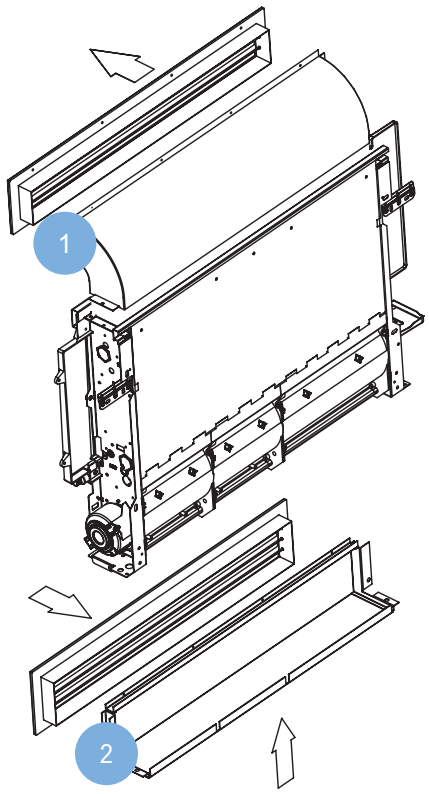

90° delivery plenum
Soffio Box

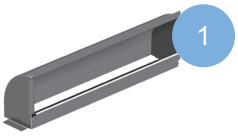

Kit intake
Soffio Box



FALSE CEILING RECESSED

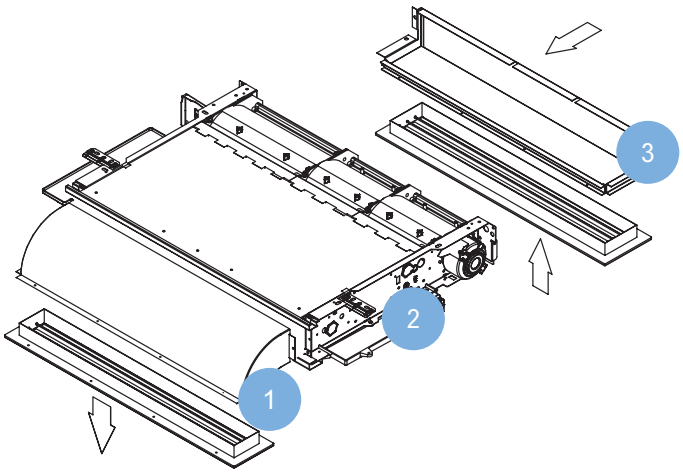

90° delivery plenum
Soffio Box

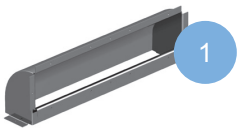

Telescopic upper delivery plenum
superiore telescopica
Soffio Box

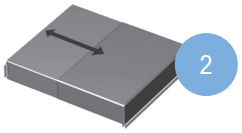

Kit intake
Soffio Box



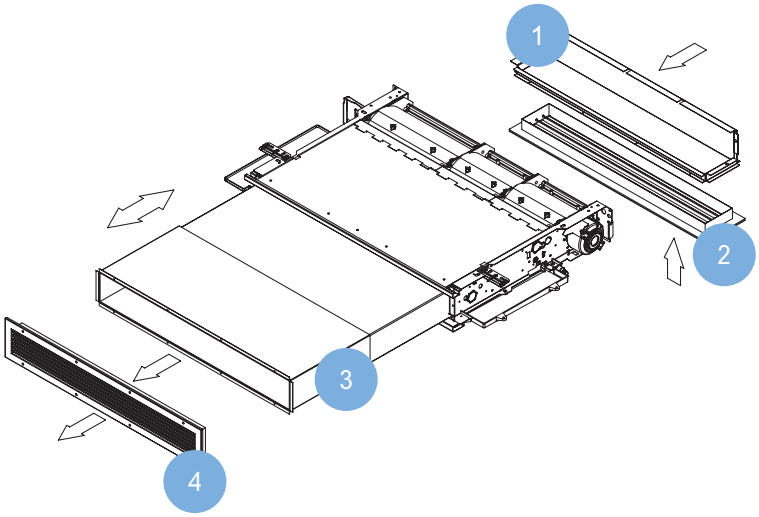

Kit intake
Soffio Box



Air intake gristyle
Soffio Box



Telescopic upper delivery plenum
superiore telescopica
Soffio Box

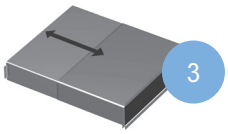

Air delivery grille
Soffio Box

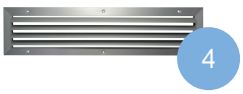



MODBUS WALL-MOUNTED CHRONOTHERMOSTAT

Thanks to the wall-mounted chronothermostat, it is possible to connect up to 30 fan coils via MODBUS and select:

- The operating mode,
- The temperature
- The ventilation speed
- The chronothermostat function.

The chronothermostat, compatible with all Soffio models, features a backlit LCD display and an integrated room probe.



TERMINALS FOR EVERY NEED

Soffio fan coils represent an advanced solution for room air conditioning, designed to combine installation versatility, energy efficiency, and absolute comfort. The possibility of ceiling, wall, or other strategic installations allows for harmonious integration into any context, ensuring uniform and well-balanced air distribution.

Ideal for creating modern and integrated systems, Soffio fan coils can be combined with different heat generators, such as heat pumps, condensing boilers, and combined systems with solar collectors, offering maximum design flexibility and meeting comfort needs in every season.

ITALTHERM S.p.A.
Via S. D'Acquisto
29010 | Pontenure | PC
+39 0523 57 56 11 | info@italtherm.it

The data shown in this catalog are to be considered indicative and non-binding. ITALTHERM reserves the right to make modifications without prior notice.

985000100_09/09/2026