C321114001 - Biofloor 0-5l/min. - 4 circuits

Product Data Sheet 2026/11/22



Modular manifold suitable for heating and cooling systems.
Composed of modules connected to each other and removable that give the system maximum flexibility and enables time savings on the work site.
Included:

- Flow meter 0-5 l/min. for each circuit
- Thermostatic mechanism M30x1.5 with protection cap
- 2x ball valves 1 1/4" M x 1" F
- 2x thermometer
- 2x Flovent (automatic air vent)
- 2x draining valve
- 2x metallic fixing bracket with screws and dowels

Advantages

Advantages:

- **Multi-position:**

fully modular and reversible left/right and also up/down. Possible to add or remove some circuits easily and quickly if necessary thanks to extension kits.

- **Long service life:**

Excellent insulation properties and corrosion free. Validated by 2500 hours of duration testing on internal bench test. Connections in metallic pieces to make easier installation and maintenance.

- **Performant:**

flow meters accurate thanks to a new measurement disk. Easy to grip and adjust thanks to the cross-shaped design. Equal flow per loop.
Available from 2 to 10 circuits. Connection 3/4" Euroconus. Inlet/Outlet connection 1" F to the ball valve.
Supplied assembled to the bracket. Compliant with standards EN1264 and DIN4725.

Technical Specifications

- Material: PA6,6 with 30% of glass fiber reinforced.
- Nominal working temperature: 50 °C - max. 65 °C.
- Maximum working pressure: 6 bar at 65 °C.

Description	Biofloor 0-5l/min. - 4 circuits
Order Code	C321114001
GTIN	3430650492905
Model	Biofloor 9100 Manifold with flow meter 0-5 l/min.
Number of circuits	4
Length (A) [mm]	323
Height (B) [mm]	383
Depth (C) [mm]	100

© 2026 Aalberts hfc B.V. All rights reserved. We reserve the right to change designs and technical specifications of our products.





Dimensions

Type	D [mm]	Connection		Entraxis (G) [mm]	H [mm]	End tee (I) [mm]	Ball valve (J) [mm]	K [mm]	L [mm]
		E	F						
Biofloor 9001 0-5l/min. - 2-10 circuits	80	G 1" F	G $\frac{3}{4}$" M Eurocone	208.8	45	59	63	36.5	33

Manifold cabinet selection

Type	Exclusive		Standard	
	Cabinet Flush-mounted V9018	Cabinet Wall-mounted V9016	Cabinet Flush-mounted V9018S	Cabinet Wall-mounted V9016S
Biofloor 0-5l/min. - 2 circuits	F18556	F18550	F18567	F18562
Biofloor 0-5l/min. - 3 circuits	F18556	F18550	F18567	F18562
Biofloor 0-5l/min. - 4 circuits	F18556	F18550	F18567	F18562
Biofloor 0-5l/min. - 5 circuits	F18556	F18550	F18567	F18562
Biofloor 0-5l/min. - 6 circuits	F18557	F18551	F18568	F18563
Biofloor 0-5l/min. - 7 circuits	F18557	F18551	F18568	F18563
Biofloor 0-5l/min. - 8 circuits	F18558	F18552	F18569	F18564
Biofloor 0-5l/min. - 9 circuits	F18558	F18552	F18569	F18564
Biofloor 0-5l/min. - 10 circuits	F18558	F18552	F18569	F18564





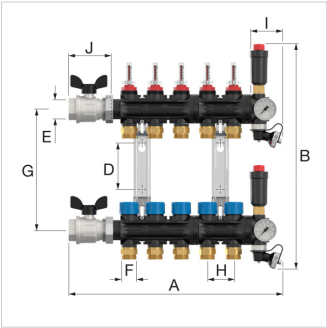

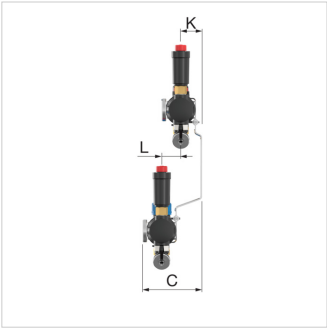

© 2026 Aalberts hfc B.V. All rights reserved. We reserve the right to change designs and technical specifications of our products.

Classification General Data

Etim Group	Distribution systems and components
Etim Class	Manifold for hydronic circuits
Product Name	K9100T1P Manifold 4 circuits 0-5L 3/4E
Brand	Comap
Product Type	Biofloor 9100
Order Code	C321114001
GTIN	3430650492905

Attributes

Connection type primary side	2-pipe
Suitable for cooling	Yes
Material	Plastic
Position primary connection	Left/right
Primary connection	Internal thread cylindrical BSPP-G (ISO 228-1)
Nominal diameter primary connection	1 inch (25)
Outer pipe diameter primary connection	25 mm
With valves on primary connection	Yes
Medium temperature (continuous)	16 - 65 °C
Max. operating pressure	6 bar
With mixing valve	No
Expandable	Yes
Max. number of expansion groups	12
With temperature limit	Yes
With non-return valve	No
With domestic hot water circulation pump	No
With controller	No
Hydraulic balance control	None
Volume flow measurement	Analogue
With thermometer	Yes
Temperature measurement supply	Analogue
Temperature measurement return	Analogue
With de-aeration	Yes
With pressure gauge	No
With fill- and drain valve	Yes
Number of groups secondary	4
Secondary connection	Euroconus standardless
Nominal diameter secondary connection	3/4 inch (20)
Outer pipe diameter secondary	12 - 20 mm
With flow-through indicator	Yes
Flow-through capacity	0 - 5 l/h
With thermal actuator	No
With ceramic valve	No
With wall-mounting bracket	Yes
Width	368 mm
Height	383 mm
Depth	100 mm
With casing	No

© 2026 Aalberts hfc B.V. All rights reserved. We reserve the right to change designs and technical specifications of our products.

Find more information online:

Installation and operating instruction
STEP
DWG
Brochure Biofloor 9100 Manifold with flow meter 0-5 l/min. (English)
Brochure Biofloor 9100 Manifold with flow meter 0-5 l/min. (Serbian)
Brochure Biofloor 9100 Manifold with flow meter 0-5 l/min. (Macedonian)

Fort Blauwkapel 1
1358 DB, Almere - nl

T +31 20 210 34 97
E nl.info@aalberts-hfc.com
I comap.aalberts-hfc.com/nl

© 2026 Aalberts hfc B.V. All rights reserved. We reserve the right to change designs and technical specifications of our products.