7778W2012 - Comaplak - Faucet Fixing Kit Multiskin Press Ø20x2 - 1/2" F

Product Data Sheet 2026/11/22

Comap makes the work of professionals easier with its ready-to-use and easy-to-install plasterboard fitting kit. Manually breakable, it can be easily used on a single outlet.



Advantages

- All in one kit - Ready to use.
- Hand-cut off plate for single cold-water outlet.
- Installation marks (no need to take measurements).
- Protection plugs up to 10 bar.

Technical Specifications

- Wall plate: L 240 mm x l 85 mm.
- Holes spacing: 150 mm.
- Thread : Female 1/2.
- Multilayer fitting: Profile TH H U - Ø 16 mm or 20 mm.

Description	Comaplak - Faucet Fixing Kit Multiskin Press Ø20x2 - 1/2" F
Order Code	7778W2012
GTIN	3430650463905
Model	7778W - Comaplak - Faucet Fixing Kit for Drywall (Greenskin version)
Dimensions	Ø20x2 - 1/2" F

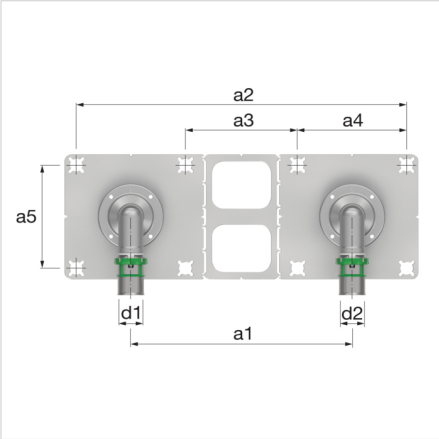

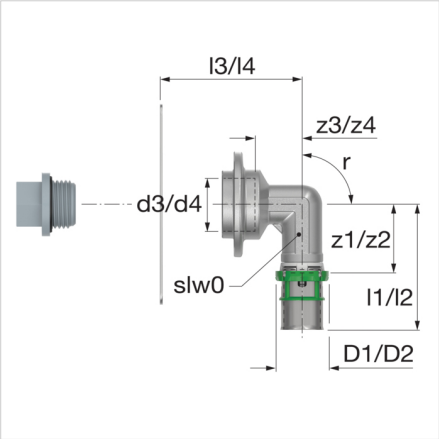

Dimensions 7778W - Comaplak - Faucet Fixing Kit for Drywall (Greenskin version)

Type	Dimensions											
	d1 [mm]	d2 [mm]	d3 ["]	d4 ["]	D1 [mm]	D2 [mm]	z1 [mm]	z2 [mm]	z3 [mm]	z4 [mm]	l1 [mm]	l2 [mm]
Comaplak - Faucet Fixing Kit Multiskin Press Ø16x2 - 1/2" F	16	16	G1/2"	G1/2"	23	23	29,4	29,4	20	20	53	53
Comaplak - Faucet Fixing Kit Multiskin Press Ø20x2 - 1/2" F	20	20	G1/2"	G1/2"	27	27	29,4	29,4	20	20	53	53

© 2026 Aalberts hfc B.V. All rights reserved. We reserve the right to change designs and technical specifications of our products.

Dimensions 7778W - Comaplak - Faucet Fixing Kit for Drywall (Greenskin version)

Type	Dimensions								
	l3 [mm]	l4 [mm]	a1 [mm]	a2 [mm]	a3 [mm]	a4 [mm]	a5 [mm]	r [°]	slw0 [mm]
Comaplak - Faucet Fixing Kit Multiskin Press Ø16x2 - 1/2" F	30	30	150	224	76	74	70	90	17
Comaplak - Faucet Fixing Kit Multiskin Press Ø20x2 - 1/2" F	30	30	150	224	76	74	70	90	17

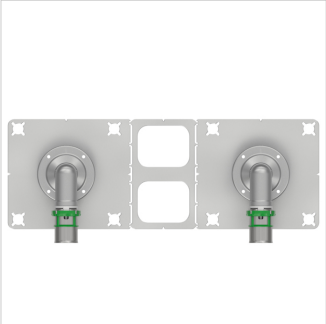

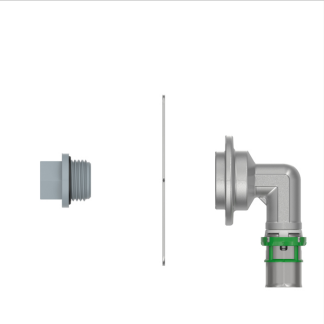

© 2026 Aalberts hfc B.V. All rights reserved. We reserve the right to change designs and technical specifications of our products.

Classification General Data

Etim Group	Fittings, flanges and connectors
Etim Class	Wall plate on bracket
Product Name	Set of fixation for taps on dry wall 20x2-1/2
Brand	Comap
Product Type	MultiSkin Metlallic Press
Order Code	7778W2012
GTIN	3430650463905

Attributes

Model	Double flat
System specific	Yes
Surface protection	Tinned
Nominal diameter connection	DN 15
Outer pipe diameter connection	20 mm
Connection	Press sleeve
Thread size tap connection	1/2 inch
Length of connection 1	50 mm
Working length connection 1	26 mm
Wall thickness, connection 1	0 mm
Length of connection 2	50 mm
Working length connection 2	26 mm
Wall thickness, connection 2	0 mm
Length from wall plate	240 mm
Distance centre-to-centre	150 mm
Max. operating pressure at 20 °C	10 bar
Contour code	TH/U
With soundproofing set	No
With thermal insulation	No
Medium temperature (continuous)	0 - 70 °C
DVGW quality mark for gas	No
DVGW quality mark for water	No
Compliant with NF 545	No
KOMO certified	No
Material	Brass
KIWA certified	Yes
Max. medium temperature (continuous)	70 °C
Housing material	Brass
Material quality	Other
Min. medium temperature (continuous)	0 °C
Gastec QA	No

© 2026 Aalberts hfc B.V. All rights reserved. We reserve the right to change designs and technical specifications of our products.

Find more information online:

Comaplak Installation instructions
Installation and operating instructions
ACS certificate
DVGW certificate (DW-8501CT0387)
DVGW certificate (CW-8501CT0388)
NF certificate
WRAS certificate
PZH certificate
PZH certificate MultiSkin2
PZH certificate MultiSkin4
MultiSkin ÉMI certificate HUN
Certificate MultiSkin RUS
KIWA K90957-08 MultiSkin 4 Piping System
KOMO K90961-08 certificate MultiSkin 4 Piping System
KIWA K110283-01 MultiSkin 2 Piping System
KOMO K110284-02 certificate MultiSkin 2 Piping System
KOMO certificate BioPEX system
KIWA 2305708 KUKreg4.pdf
KOMO certificate BioPert system
7778W DWG
7778W STEP
7778W REVIT
Leaflet
Greenskin Multilayer press-fit system

Fort Blauwkapel 1
1358 DB, Almere - nl

T +31 20 210 34 97
E nl.info@aalberts-hfc.com
I comap.aalberts-hfc.com/nl

© 2026 Aalberts hfc B.V. All rights reserved. We reserve the right to change designs and technical specifications of our products.