# 7240W4020 - Reduced coupling 40x3,5 - 20x2

Product Data Sheet 2026/11/22



The Greenskin Metallic Press fittings for multilayer pipe.

- A range of metal fittings from 14 to 75 mm.
- Greenskin press fittings are compatible with TH, H and U profiles.
- Immediate verification of crimping with the Visu-Control ring.
- Low pressure loss across the fittings.

## Advantages

**Performance**

- Press connections can be done in seven seconds and this type of connection avoids the risks associated with welding.
- Greenskin press fittings are compatible with TH, H and U profiles, and therefore with different tooling brands.
- Improved hydraulics with a reduction of pressure losses of 17% on average compared to former products.

**Safety**

- Removable Visu-Control® ring, allowing visual and tactile control of a crimp.
- The "not crimped, not sealed" technology: if not crimped, the fitting allows water to pass during the pressure test.
- Protective cap to prevent impurities from penetrating.

## Technical Specifications

Greenskin system is designed for the following applications:

- Sanitary water: +5 °C to +95 °C (operating temperature) and 10 bar (maximum operating pressure).
- Heating and cooling: -10 °C to +95 °C (operating temperature) and 10 bar (maximum operating pressure).
- Rainwater: -10 °C to +95 °C (operating temperature) and 10 bar (maximum operating pressure).

| | |
|---|---|
| Description | Reduced coupling 40x3,5 - 20x2 |
| Order Code | 7240W4020 |
| GTIN | 3430650461895 |
| Model | 7240W - Reduced Straight |
| Dimensions | 40 x 3,5 - 20 x 2 |

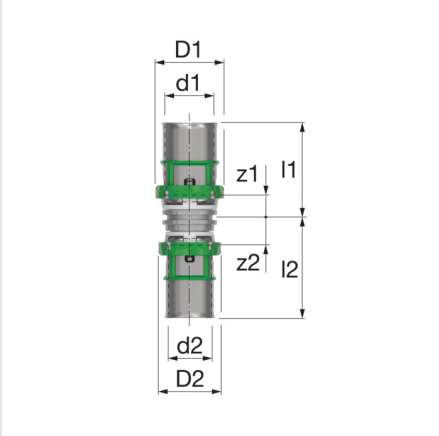




© 2026 Aalberts hfc B.V. All rights reserved. We reserve the right to change designs and technical specifications of our products.

## Dimensions 7240W - Reduced Straight

| Type | Dimensions | | | | | | | |
|---|---|---|---|---|---|---|---|---|
| | d1 [mm] | d2 [mm] | D1 [mm] | D2 [mm] | z1 [mm] | z2 [mm] | l1 [mm] | l2 [mm] |
| Reduced coupling 16x2 - 14x2 | 16 | 14 | 23 | 21 | 7 | 9 | 31 | 33 |
| Reduced coupling 18x2 - 16x2 | 18 | 16 | 25 | 23 | 7 | 9 | 31 | 33 |
| Reduced coupling 20x2 - 14x2 | 20 | 14 | 27 | 21 | 7 | 9 | 31 | 33 |
| Reduced coupling 20x2 - 16x2 | 20 | 16 | 27 | 23 | 7 | 9 | 31 | 33 |
| Reduced coupling 20x2 - 18x2 | 20 | 18 | 27 | 25 | 7 | 9 | 31 | 33 |
| Reduced coupling 26x3 - 16x3 | 26 | 16 | 33 | 23 | 7 | 9 | 32 | 33 |
| Reduced coupling 26x3 - 18x2 | 26 | 18 | 33 | 25 | 7 | 9 | 32 | 33 |
| Reduced coupling 26x3 - 20x2 | 26 | 20 | 33 | 27 | 7 | 9 | 39 | 33 |
| Reduced coupling 32x3 - 16x2 | 32 | 16 | 39 | 23 | 9 | 10 | 37 | 34 |
| Reduced coupling 32x3 - 20x2 | 32 | 20 | 39 | 27 | 9 | 10 | 37 | 34 |
| Reduced coupling 32x3 - 26x3 | 32 | 26 | 39 | 33 | 9 | 10 | 37 | 35 |
| Reduced coupling 40x3,5 - 20x2 | 40 | 20 | 47 | 27 | 14 | 7 | 53 | 31 |
| Reduced coupling 40x3,5 - 26x3 | 40 | 26 | 47 | 33 | 14 | 7 | 53 | 31 |
| Reduced coupling 40x3,5 - 32x3 | 40 | 32 | 47 | 39 | 14 | 7 | 53 | 36 |
| Reduced coupling 50x4 - 32x3 | 50 | 32 | 57 | 39 | 16 | 7 | 56 | 36 |
| Reduced coupling 50x4 - 40x3,5 | 50 | 40 | 57 | 47 | 16 | 7 | 57 | 46 |
| Reduced coupling 63x4,5 - 40x3,5 | 63 | 40 | 71 | 47 | 17 | 7 | 78 | 46 |
| Reduced coupling 63x4,5 - 50x4 | 63 | 50 | 71 | 57 | 17 | 7 | 78 | 47 |
| Reduced coupling 75x6 - 50x4 | 75 | 50 | 86 | 57 | 13 | 12 | 75 | 51 |
| Reduced coupling 75x6 - 63x4,5 | 75 | 63 | 86 | 71 | 13 | 12 | 75 | 73 |





© 2026 Aalberts hfc B.V. All rights reserved. We reserve the right to change designs and technical specifications of our products.

## Classification General Data

| | |
|---|---|
| **Etim Group** | Fittings, flanges and connectors |
| **Etim Class** | Fitting with 2 connections |
| **Product Name** | Reduced coupling female-female 40 - 20 |
| **Brand** | Comap |
| **Product Type** | Greenskin Metallic Press |
| **Order Code** | 7240W4020 |
| **GTIN** | 3430650461895 |

## Attributes

| | |
|---|---|
| **Material connection 1** | Brass |
| **Material quality connection 1** | CuZn39Pb3 (CW617N) |
| **Surface protection connection 1** | Tinned |
| **Surface treatment connection 1** | Sanded |
| **Material connection 2** | Brass |
| **Material quality connection 2** | CuZn39Pb3 (CW617N) |
| **Surface protection connection 2** | Tinned |
| **Surface treatment connection 2** | Sanded |
| **Shape** | Straight |
| **Model** | 1-part |
| **Bend angle** | 0 ° |
| **Bend radius** | 0 mm |
| **Reducing** | Yes |
| **Eccentric** | No |
| **System specific** | Yes |
| **Nominal diameter connection 1** | DN 32 |
| **Outer pipe diameter connection 1** | 40 mm |
| **Wall thickness, connection 1** | 3.5 mm |
| **Wall thickness connecting pipe, connection 1** | 3.5 mm |
| **Connection 1** | Press sleeve |
| **Contour code connection 1** | TH/U |
| **Nominal diameter connection 2** | DN 15 |
| **Outer pipe diameter connection 2** | 20 mm |
| **Wall thickness, connection 2** | 2 mm |
| **Wall thickness connecting pipe, connection 2** | 2 mm |
| **Connection 2** | Press sleeve |
| **Contour code connection 2** | TH/U |
| **Main colour fitting** | Grey |
| **Flange compression class (ANSI)** | Other |
| **Flange compression class (PN)** | Other |
| **Flange compression class (JIS)** | Other |
| **Flange compression class (BS)** | Other |
| **Material sealing** | Ethylene-propylene diene monomer rubber (EPDM) |
| **With buffer stud** | Yes |
| **Zeta value** | 0.61 |
| **High tensile strength** | No |
| **Length** | 84 mm |
| **Length of connection 1** | 53 mm |
| **Working length connection 1** | 14 mm |
| **Length of connection 2** | 31 mm |
| **Working length connection 2** | 7 mm |
| **Wrench width** | 0 mm |
| **Wrench width union nut** | 0 mm |
| **Tightening torque** | 40 - 40 Nm |
| **Medium temperature (continuous)** | 0 - 110 °C |



© 2026 Aalberts hfc B.V. All rights reserved. We reserve the right to change designs and technical specifications of our products.

| | |
|---|---|
| **Max. operating pressure at 20 °C** | 10 bar |
| **Max. operating pressure at max. medium temperature** | 10 bar |
| **With thermal insulation** | No |
| **Ring stiffness class** | Other |
| **Standard Dimension Ratio (SDR)** | 0 |
| **With sealing rings/gaskets** | No |
| **Capped** | No |
| **With connection indicator** | No |
| **With drain valve** | No |
| **With de-aerator** | No |
| **FM quality mark** | No |
| **LPCB quality mark** | No |
| **ULC quality mark** | No |
| **UL quality mark** | No |
| **DIN-CERTCO certificate** | No |
| **VdS quality mark** | No |
| **With approval for TÜV** | No |
| **DVGW quality mark for gas** | Yes |
| **DVGW quality mark for water** | Yes |
| **Certified according to NF 545** | Yes |
| **KIWA certified** | Yes |
| **Gastec QA mark** | No |
| **KOMO certified** | Yes |
| **Gastec QA - AR 214 (H2)** | No |
| **Type approval according to BBR/EKS** | No |
| **Flange standard** | Other |
| **Contour code** | TH |
| **Min. medium temperature (continuous)** | 0 °C |
| **Max. medium temperature (continuous)** | 70 °C |
| **Gastec QA** | Yes |
| **KIWA certified** | Yes |
| **VdS quality mark** | No |
| **DVGW quality mark** | Yes |



© 2026 Aalberts hfc B.V. All rights reserved. We reserve the right to change designs and technical specifications of our products.

## Find more information online:

Installation and operating instructions
ACS certificate
DVGW certificate (DW-8501CT0387)
DVGW certificate (CW-8501CT0388)
NF certificate
WRAS certificate
PZH certificate
PZH certificate MultiSkin2
PZH certificate MultiSkin4
MultiSkin ÉMI certificate HUN
Certificate MultiSkin RUS
MultiSkin Drinking water certificate HUN
KIWA K90957-08 MultiSkin 4 Piping System
KOMO K90961-08 certificate MultiSkin 4 Piping System
KIWA K110283-01 MultiSkin 2 Piping System
KOMO K110284-02 certificate MultiSkin 2 Piping System
KOMO certificate BioPEX system
KIWA 2305708 KUKreg4.pdf
KOMO certificate BioPert system
7240W DWG
7240W STEP
7240W RFA
Leaflet
Greenskin Multilayer press-fit system

Fort Blauwkapel 1
1358 DB, Almere - nl

**T** +31 20 210 34 97
**E** nl.info@aalberts-hfc.com
**I** comap.aalberts-hfc.com/nl



© 2026 Aalberts hfc B.V. All rights reserved. We reserve the right to change designs and technical specifications of our products.