7130RW202620 - Reduced tee 20x2-26x3-20x2

Product Data Sheet 2026/11/22



The Greenskin Metallic Press fittings for multilayer pipe.

- A range of metal fittings from 14 to 75 mm.
- Greenskin press fittings are compatible with TH, H and U profiles.
- Immediate verification of crimping with the Visu-Control ring.
- Low pressure loss across the fittings.

Advantages

Performance

- Press connections can be done in seven seconds and this type of connection avoids the risks associated with welding.
- Greenskin press fittings are compatible with TH, H and U profiles, and therefore with different tool brands.
- Improved hydraulics with a reduction of pressure losses of 17% on average compared to former products.

Safety

- Removable Visu-Control® ring, allowing visual and tactile control of a crimp.
- The "not crimped, not sealed" technology: if not crimped, the fitting allows water to pass during the pressure test.
- Protective cap to prevent impurities from penetrating.

Technical Specifications

Greenskin system is designed for the following applications:

- Sanitary water: +5 °C to +95 °C (operating temperature) and 10 bar (maximum operating pressure).
- Heating and cooling: -10 °C to +95 °C (operating temperature) and 10 bar (maximum operating pressure).
- Rainwater: -10 °C to +95 °C (operating temperature) and 10 bar (maximum operating pressure).

Description	Reduced tee 20x2-26x3-20x2
Order Code	7130RW202620
GTIN	3430650461086
Model	7130RW - Reduced Tee
Dimensions	20 x 2 - 26 x 3 - 20 x 2

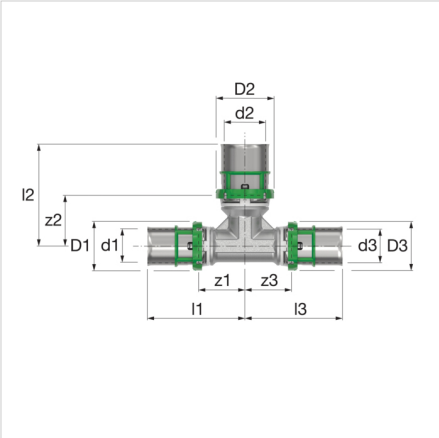

© 2026 Aalberts hfc B.V. All rights reserved. We reserve the right to change designs and technical specifications of our products.

Dimensions 7130RW - Reduced Tee

Type	Dimensions											
	d1 [mm]	d2 [mm]	d3 [mm]	D1 [mm]	D2 [mm]	D3 [mm]	z1 [mm]	z2 [mm]	z3 [mm]	l1 [mm]	l2 [mm]	l3 [mm]
Reduced tee 16x2-14x2-14x2	16	14	14	23	21	21	20	20	20	43	43	43
Reduced tee 16x2-20x2-16x2	16	14	16	23	21	23	20	20	20	43	43	43
Reduced tee 16x2,25 14x2-16x2,25	16	16	14	23	23	21	20	20	20	43	43	43
Reduced tee 16x2,25 16,25-14x2	16	20	16	23	27	23	21	23	21	45	47	45
Reduced tee 18x2-16x2-16X2	18	16	16	25	23	23	23	22	23	47	45	46
Reduced tee 18x2-16x2-18X2	18	16	18	25	23	25	23	22	23	47	46	47
Reduced tee 20x2-14x2-20x2	20	14	20	27	21	27	23	22	23	46	47	46
Reduced tee 20x2-16x2-16x2	20	16	16	27	23	23	23	23	23	47	47	47
Reduced tee 20x2-16x2-18x2	20	16	18	27	23	25	23	22	23	47	46	46
Reduced tee 20x2-16x2-20x2	20	16	20	27	23	27	23	22	23	47	45	47
Reduced tee 20x2-18x2-18x2	20	18	18	27	25	25	23	22	23	47	46	46
Reduced tee 20x2-18x2-20x2	20	18	20	27	25	27	23	22	23	47	46	46
Reduced tee 20x2-20x2-16x2	20	20	16	27	27	23	23	22	22	47	46	46
Reduced tee 20x2-26x3-16x2	20	26	16	27	33	23	31	31	31	55	56	55
Reduced tee 20x2-26x3-20x2	20	26	20	27	33	27	31	31	31	55	56	53
Reduced tee 26x3-16x2-16x2	26	16	16	33	23	23	31	25	31	55	49	54
Reduced tee 26x3-16x2-20x2	26	16	20	33	23	27	31	25	31	56	49	55
Reduced tee 26x3-16x2-26x3	26	16	26	33	23	33	31	25	31	56	49	56
Reduced tee 26x3-18x2-18x2	26	18	18	33	25	25	32	32	32	56	55	56
Reduced tee 26x3-18x2-20x2	26	18	20	33	25	27	32	32	32	56	55	56
Reduced tee 26x3-18x2-26x3	26	18	26	33	25	33	32	32	32	56	55	56
Reduced tee 26x3-20x2-16x2	26	20	16	33	27	23	31	31	31	56	55	55
Reduced tee 26x3-20x2-20x2	26	20	20	33	27	27	31	31	31	56	55	56
Reduced tee 26x3-20x2-26x3	26	20	26	33	27	33	31	31	31	56	56	56
Reduced tee 26x3-26x3-16x2	26	26	16	33	33	23	31	31	31	56	56	55
Reduced tee 26x3-26x3-20x2	26	26	20	33	33	27	31	31	31	56	56	55
Reduced tee 26x3-32x3-26x3	26	32	26	33	39	33	32	32	32	57	61	56
Reduced tee 32x3-16x2-32x3	32	16	32	39	23	39	32	32	32	61	55	61
Reduced tee 32x3-18x2-32x3	32	18	32	39	25	39	32	32	32	61	55	61
Reduced tee 32x3-20x2-32x3	32	20	32	39	27	39	32	32	32	61	57	61
Reduced tee 32x3-26x3-26x3	32	26	26	39	33	33	32	32	32	61	57	57
Reduced tee 32x3-26x3-32x3	32	26	32	39	33	39	32	32	32	61	57	61
Reduced tee 32x3-32x3-26x3	32	32	26	39	39	33	32	32	32	61	61	57
Reduced tee 40x3,5-20x2-40x3,5	40	20	40	47	27	47	32	31	32	71	55	71
Reduced tee 40x3,5-26x3-40x3,5	40	26	40	47	33	47	32	31	32	71	56	71
Reduced tee 40x3,5-32x3-40x3,5	40	32	40	47	39	47	32	32	32	71	60	71
Reduced tee 50x4-26x3-50x4	50	26	50	57	33	57	37	37	37	78	62	78

© 2026 Aalberts hfc B.V. All rights reserved. We reserve the right to change designs and technical specifications of our products.

Type	Dimensions											
	d1 [mm]	d2 [mm]	d3 [mm]	D1 [mm]	D2 [mm]	D3 [mm]	z1 [mm]	z2 [mm]	z3 [mm]	l1 [mm]	l2 [mm]	l3 [mm]
Reduced tee 50x4-32x3-50x4	50	32	50	57	39	57	37	38	37	78	66	77
Reduced tee 50x4-40x3,5-50x4	50	40	50	57	47	57	37	40	37	78	79	78
Reduced tee 63x4,5-26x3-63x4,5	63	26	63	71	33	71	47	46	47	108	71	108
Reduced tee 63x4,5-32x3-63x4,5	63	32	63	71	39	71	47	48	47	108	77	108
Reduced tee 63x4,5-40x3,5-63x4,5	63	40	63	71	47	71	47	48	47	108	87	108
Reduced tee 63x4,5-50x4-63x4,5	63	50	63	71	57	71	47	48	47	108	88	108
Reduced tee 75x6 - 50x4 - 75x6	75	50	75	86	57	86	62	61	62	124	100	124
Reduced tee 75x6 - 63X4,5 - 75x6	75	63	75	86	71	86	62	60	62	124	122	124

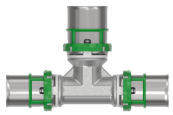

© 2026 Aalberts hfc B.V. All rights reserved. We reserve the right to change designs and technical specifications of our products.

Classification General Data

Etim Group	Fittings, flanges and connectors
Etim Class	Fitting with 3 connections
Product Name	Reduced tee female 20x2-26x3-20x2
Brand	Comap
Product Type	Greenskin Metallic Press
Order Code	7130RW202620
GTIN	3430650461086

Attributes

Material connection 1	Brass
Material quality connection 1	CuZn39Pb3 (CW617N)
Surface protection connection 1	Tinned
Surface treatment connection 1	Blasted
Material connection 2	Brass
Material quality connection 2	CuZn39Pb3 (CW617N)
Surface protection connection 2	Tinned
Surface treatment connection 2	Blasted
Material connection 3	Brass
Material quality connection 3	CuZn39Pb3 (CW617N)
Surface protection connection 3	Tinned
Surface treatment connection 3	Blasted
Model	T-piece
Angle	180 °
Swept entry type (with inner radius)	Yes
Reducing	Yes
Multi-part	Yes
System specific	Yes
Nominal diameter connection 1	DN 15
Outer pipe diameter connection 1	20 mm
Wall thickness, connection 1	2 mm
Wall thickness connecting pipe, connection 1	2 mm
Connection 1	Press sleeve
Contour code connection 1	TH/U
Nominal diameter connection 2	DN 20
Outer pipe diameter connection 2	26 mm
Wall thickness, connection 2	3 mm
Wall thickness connecting pipe, connection 2	3 mm
Connection 2	Press sleeve
Contour code connection 2	TH
Nominal diameter connection 3	DN 15
Outer pipe diameter connection 3	20 mm
Wall thickness, connection 3	2 mm
Wall thickness connecting pipe, connection 3	2 mm
Connection 3	Press sleeve
Contour code connection 3	TH/U
Flange compression class	Other
Flange standard	Other
Material sealing	Ethylene-propylene diene monomer rubber (EPDM)
Main colour fitting	Grey
Length of connection 1	47 mm
Working length connection 1	23 mm
Length of connection 2	49 mm

© 2026 Aalberts hfc B.V. All rights reserved. We reserve the right to change designs and technical specifications of our products.

Working length connection 2	24 mm
Length of connection 3	47 mm
Working length connection 3	31 mm
Wrench width	23 mm
Max. operating pressure at 20 °C	10 bar
Wrench width union nut	23 mm
Max. operating pressure at max. medium temperature	70 bar
Medium temperature (continuous)	0 - 70 °C
Ring stiffness class	Other
Standard Dimension Ratio (SDR)	0
With sealing rings/gaskets	Yes
With drain valve	No
With de-aerator	No
With thermal insulation	No
With buffer stud	Yes
Capped	Yes
With connection indicator	No
FM quality mark	No
LPCB quality mark	No
ULC quality mark	No
UL quality mark	No
DIN-CERTCO certificate	No
VdS quality mark	No
With approval for TÜV	No
DVGW quality mark for gas	Yes
DVGW quality mark for water	Yes
KIWA certified	Yes
Gastec QA mark	No
KOMO certified	Yes
Gastec QA - AR 214 (H2)	No
Type approval according to BBR/EKS	No
Angle adjustable	No
Angle	180 - 180 °
Min. medium temperature (continuous)	0 °C
Max. medium temperature (continuous)	70 °C
Gastec QA	No
KIWA certified	Yes
VdS quality mark	No
DVGW quality mark	Yes

© 2026 Aalberts hfc B.V. All rights reserved. We reserve the right to change designs and technical specifications of our products.

Find more information online:

Installation and operating instructions
ACS certificate
DVGW certificate (DW-8501CT0387)
DVGW certificate (CW-8501CT0388)
NF certificate
WRAS certificate
PZH certificate
PZH certificate MultiSkin2
PZH certificate MultiSkin4
MultiSkin ÉMI certificate HUN
Certificate MultiSkin RUS
MultiSkin Drinking water certificate HUN
KIWA K90957-08 MultiSkin 4 Piping System
KOMO K90961-08 certificate MultiSkin 4 Piping System
KIWA K110283-01 MultiSkin 2 Piping System
KOMO K110284-02 certificate MultiSkin 2 Piping System
KOMO certificate BioPEX system
KIWA 2305708 KUKreg4.pdf
KOMO certificate BioPert system
7130RW DWG
7130RW STEP
7130W/7130RW RFA
Leaflet
Greenskin Multilayer press-fit system

Fort Blauwkapel 1
1358 DB, Almere - nl

T +31 20 210 34 97
E nl.info@aalberts-hfc.com
I comap.aalberts-hfc.com/nl

© 2026 Aalberts hfc B.V. All rights reserved. We reserve the right to change designs and technical specifications of our products.