7130GW403440 - Tee Threaded female 40x3,5 - 3/4" - 40x3,5

Product Data Sheet 2026/11/22

The Greenskin Metallic Press fittings for multilayer pipe.

- A range of metal fittings from 14 to 75 mm.
- Greenskin press fittings are compatible with TH, H and U profiles.
- Immediate verification of crimping with the Visu-Control ring.
- Low pressure loss across the fittings.



Advantages

Performance

- Press connections can be done in seven seconds and this type of connection avoids the risks associated with welding.
- Greenskin press fittings are compatible with TH, H and U profiles, and therefore with different tool brands.
- Improved hydraulics with a reduction of pressure losses of 17% on average compared to former products.

Safety

- Removable Visu-Control® ring, allowing visual and tactile control of a crimp.
- The "not crimped, not sealed" technology: if not crimped, the fitting allows water to pass during the pressure test.
- Protective cap to prevent impurities from penetrating.

Technical Specifications

Greenskin system is designed for the following applications:

- Sanitary water: +5 °C to +95 °C (operating temperature) and 10 bar (maximum operating pressure).
- Heating and cooling: -10 °C to +95 °C (operating temperature) and 10 bar (maximum operating pressure).
- Rainwater: -10 °C to +95 °C (operating temperature) and 10 bar (maximum operating pressure).

Description	Tee Threaded female 40x3,5 - 3/4" - 40x3,5
Order Code	7130GW403440
GTIN	3430650460768
Model	7130GW - Tee Threaded Female
Dimensions	40 x 3,5 - $^{3}/_{4}$" - 40 x 3,5

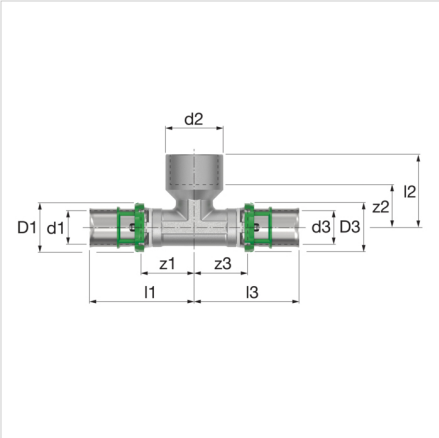

© 2026 Aalberts hfc B.V. All rights reserved. We reserve the right to change designs and technical specifications of our products.

Dimensions 7130GW - Tee Threaded Female

Type	Dimensions											
	d1 [mm]	d2 ["]	d3 [mm]	D1 [mm]	D3 [mm]	z1 [mm]	z2 [mm]	z3 [mm]	l1 [mm]	l2 [mm]	l3 [mm]	slw2 [mm]
Tee Threaded female 14x2 - 1/4" - 14x2	14	G1/4"	14	21	23	24	20	24	48	34	48	16
Tee Threaded female 16x2 - 1/2" - 16x2	16	G1/2"	16	23	23	24	20	24	48	32	48	17
Tee Threaded female 18x2 - 1/2" - 18x2	18	G1/2"	18	25	23	24	20	24	50	32	48	17
Tee Threaded female 20x2 - 1/2" - 20x2	20	G1/2"	20	27	27	24	20	24	50	32	48	17
Tee Threaded female 20x2 - 3/4" - 20x2	20	G3/4"	20	27	27	31	27	31	55	36,5	55	18
Tee Threaded female 26x3 - 1/2" - 26x3	26	G1/2"	26	33	33	31	32	31	56	49	56	18
Tee Threaded female 26x3 - 3/4" - 26x3	26	G3/4"	26	33	33	31	27	31	56	42	56	18
Tee Threaded female 26x3 - 1" - 26x3	26	G1"	26	33	33	31	31	31	56	49	56	25
Tee Threaded female 32x3 - 1/2" - 32x3	32	G1/2"	32	39	39	32	27	32	60	40	60	25
Tee Threaded female 32x3 - 3/4" - 32x3	32	G3/4"	32	39	39	32	29	32	60	44	60	25
Tee Threaded female 32x3 - 1" - 32x3	32	G1"	32	39	39	37	34	37	65	51	65	25
Tee Threaded female 32x3 - 1 1/4" - 32x3	32	G1 1/4"	32	39	39	37	36	37	65	56	65	25
Tee Threaded female 40x3,5 - 3/4" - 40x3,5	40	G3/4"	40	47	47	32	34	32	71	51	71	30
Tee Threaded female 40x3,5 - 1" - 40x3,5	40	G1"	40	47	47	32	29	32	71	44	71	30
Tee Threaded female 40x3,5 - 1 1/4" - 40x3,5	40	G1 1/4"	40	47	47	33	56	33	72	56	72	30
Tee Threaded female 50x4 - 3/4" - 50x4	50	G3/4"	50	57	57	37	38	37	78	53	78	38
Tee Threaded female 50x4 - 1" - 50x4	50	G1"	50	57	57	37	34	37	78	53	78	38
Tee Threaded female 63x4,5 - 3/4" - 63x4,5	63	G3/4"	63	71	71	47	46	47	108	58	108	51
Tee Threaded female 63x4,5 - 2" - 63x4,5	63	G2"	63	71	71	47	50	47	108	75	108	52

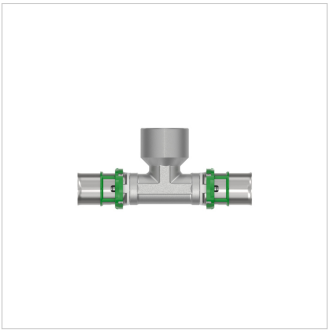

© 2026 Aalberts hfc B.V. All rights reserved. We reserve the right to change designs and technical specifications of our products.

Classification General Data

Etim Group	Fittings, flanges and connectors
Etim Class	Fitting with 3 connections
Product Name	None
Brand	Comap
Product Type	Greenskin Metallic Press
Order Code	7130GW403440
GTIN	3430650460768

Attributes

Material connection 1	Brass
Material quality connection 1	CuZn39Pb3 (CW617N)
Surface protection connection 1	Tinned
Surface treatment connection 1	Blasted
Material connection 2	Brass
Material quality connection 2	CuZn39Pb3 (CW617N)
Surface protection connection 2	Tinned
Surface treatment connection 2	Blasted
Material connection 3	Brass
Material quality connection 3	CuZn39Pb3 (CW617N)
Surface protection connection 3	Tinned
Surface treatment connection 3	Blasted
Model	T-piece
Angle	180 °
Swept entry type (with inner radius)	Yes
Reducing	No
Multi-part	Yes
System specific	Yes
Nominal diameter connection 1	DN 32
Outer pipe diameter connection 1	40 mm
Wall thickness, connection 1	3.5 mm
Wall thickness connecting pipe, connection 1	3.5 mm
Connection 1	Press sleeve
Contour code connection 1	TH/U
Nominal diameter connection 2	3/4 inch (20)
Outer pipe diameter connection 2	19.05 mm
Wall thickness, connection 2	0 mm
Wall thickness connecting pipe, connection 2	0 mm
Connection 2	Internal thread cylindrical BSPP-G (ISO 228-1)
Contour code connection 2	Other
Nominal diameter connection 3	DN 32
Outer pipe diameter connection 3	40 mm
Wall thickness, connection 3	3.5 mm
Wall thickness connecting pipe, connection 3	3.5 mm
Connection 3	Press sleeve
Contour code connection 3	TH/U
Flange compression class	Other
Flange standard	Other
Material sealing	Ethylene-propylene diene monomer rubber (EPDM)
Main colour fitting	Grey
Length of connection 1	71 mm
Working length connection 1	32 mm

© 2026 Aalberts hfc B.V. All rights reserved. We reserve the right to change designs and technical specifications of our products.

Length of connection 2	44 mm
Working length connection 2	29 mm
Length of connection 3	71 mm
Working length connection 3	32 mm
Wrench width	32 mm
Max. operating pressure at 20 °C	10 bar
Wrench width union nut	32 mm
Max. operating pressure at max. medium temperature	70 bar
Medium temperature (continuous)	0 - 70 °C
Ring stiffness class	Other
Standard Dimension Ratio (SDR)	0
With sealing rings/gaskets	Yes
With drain valve	No
With de-aerator	No
With thermal insulation	No
With buffer stud	Yes
Capped	Yes
With connection indicator	No
FM quality mark	No
LPCB quality mark	No
ULC quality mark	No
UL quality mark	No
DIN-CERTCO certificate	No
VdS quality mark	No
With approval for TÜV	No
DVGW quality mark for gas	Yes
DVGW quality mark for water	Yes
KIWA certified	Yes
Gastec QA mark	No
KOMO certified	Yes
Gastec QA - AR 214 (H2)	No
Type approval according to BBR/EKS	No
Angle adjustable	No
Angle	180 - 180 °
Contour code	TH
Min. medium temperature (continuous)	0 °C
Max. medium temperature (continuous)	70 °C
Gastec QA	No
KIWA certified	Yes
VdS quality mark	No
DVGW quality mark	Yes

© 2026 Aalberts hfc B.V. All rights reserved. We reserve the right to change designs and technical specifications of our products.

Find more information online:

Installation and operating instructions
ACS certificate
DVGW certificate (DW-8501CT0387)
DVGW certificate (CW-8501CT0388)
NF certificate
WRAS certificate
PZH certificate
PZH certificate MultiSkin2
PZH certificate MultiSkin4
MultiSkin ÉMI certificate HUN
Certificate MultiSkin RUS
MultiSkin Drinking water certificate HUN
KIWA K90957-08 MultiSkin 4 Piping System
KOMO K90961-08 certificate MultiSkin 4 Piping System
KIWA K110283-01 MultiSkin 2 Piping System
KOMO K110284-02 certificate MultiSkin 2 Piping System
KOMO certificate BioPEX system
KIWA 2305708 KUKreg4.pdf
KOMO certificate BioPert system
7130GW DWG
7130GW STEP
7130GW RFA
Leaflet
Greenskin Multilayer press-fit system

Fort Blauwkapel 1
1358 DB, Almere - nl

T +31 20 210 34 97
E nl.info@aalberts-hfc.com
I comap.aalberts-hfc.com/nl

© 2026 Aalberts hfc B.V. All rights reserved. We reserve the right to change designs and technical specifications of our products.