7041W26 - 45° Elbow 26x3

Product Data Sheet 2026/11/22



The Greenskin Metallic Press fittings for multilayer pipe.

- A range of metal fittings from 14 to 75 mm.
- Greenskin press fittings are compatible with TH, H and U profiles.
- Immediate verification of crimping with the Visu-Control ring.
- Low pressure loss across the fittings.

Advantages

Performance

- Press connections can be done in seven seconds and this type of connection avoids the risks associated with welding.
- Greenskin press fittings are compatible with TH, H and U profiles, and therefore with different tool brands.
- Improved hydraulics with a reduction of pressure losses of 17% on average compared to former products.

Safety

- Removable Visu-Control® ring, allowing visual and tactile control of a crimp.
- The "not crimped, not sealed" technology: if not crimped, the fitting allows water to pass during the pressure test.
- Protective cap to prevent impurities from penetrating.

Technical Specifications

Greenskin system is designed for the following applications:

- Sanitary water: +5 °C to +95 °C (operating temperature) and 10 bar (maximum operating pressure).
- Heating and cooling: -10 °C to +95 °C (operating temperature) and 10 bar (maximum operating pressure).
- Rainwater: -10 °C to +95 °C (operating temperature) and 10 bar (maximum operating pressure).

Description	45° Elbow 26x3
Order Code	7041W26
GTIN	3430650459779
Model	7041W - Elbow 45°
Dimensions	26 x 3

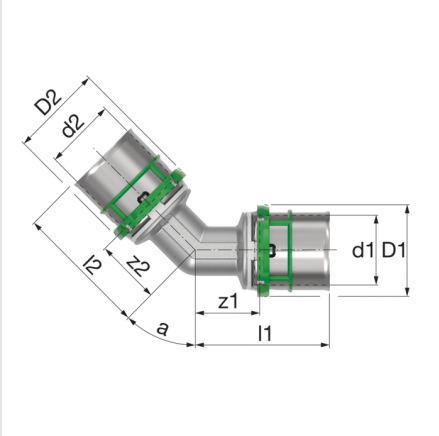

© 2026 Aalberts hfc B.V. All rights reserved. We reserve the right to change designs and technical specifications of our products.

Dimensions 7041W - Elbow 45°

Type	Dimensions								
	d1 [mm]	d2 [mm]	D1 [mm]	D2 [mm]	z1 [mm]	z2 [mm]	l1 [mm]	l2 [mm]	r [°]
45° Elbow 26x3	26	26	33	33	31	31	56	56	45
45° Elbow 32x3	32	32	39	39	32	32	61	61	45
45° Elbow 40x3,5	40	40	47	47	32	32	71	71	45
45° Elbow 50x4	50	50	57	57	37	37	78	78	45
45° Elbow 63x4,5	63	63	71	71	47	47	108	108	45
45° Elbow 75x6	75	75	86	86	62	62	124	124	45

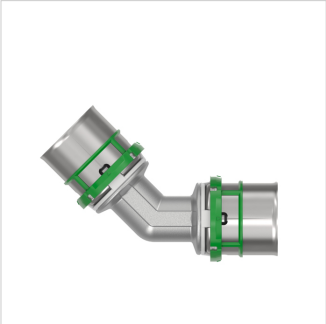

© 2026 Aalberts hfc B.V. All rights reserved. We reserve the right to change designs and technical specifications of our products.

Classification General Data

Etim Group	Fittings, flanges and connectors
Etim Class	Fitting with 2 connections
Product Name	None
Brand	Comap
Product Type	Greenskin Metallic Press
Order Code	7041W26
GTIN	3430650459779

Attributes

Material connection 1	Brass
Material quality connection 1	CuZn39Pb3 (CW617N)
Surface protection connection 1	Tinned
Surface treatment connection 1	Blasted
Material connection 2	Brass
Material quality connection 2	CuZn39Pb3 (CW617N)
Surface protection connection 2	Tinned
Surface treatment connection 2	Blasted
Shape	Bend
Model	1-part
Bend angle	45 °
Bend radius	0.785 mm
Reducing	No
Eccentric	No
System specific	Yes
Nominal diameter connection 1	DN 20
Outer pipe diameter connection 1	26 mm
Wall thickness, connection 1	3 mm
Wall thickness connecting pipe, connection 1	3 mm
Connection 1	Press sleeve
Contour code connection 1	TH
Nominal diameter connection 2	DN 20
Outer pipe diameter connection 2	26 mm
Wall thickness, connection 2	2 mm
Wall thickness connecting pipe, connection 2	2 mm
Connection 2	Press sleeve
Contour code connection 2	TH
Main colour fitting	Grey
Flange compression class (ANSI)	Other
Flange compression class (PN)	Other
Flange compression class (JIS)	Other
Flange compression class (BS)	Other
Material sealing	Ethylene-propylene diene monomer rubber (EPDM)
With buffer stud	Yes
Zeta value	0.636
High tensile strength	No
Length	112 mm
Length of connection 1	56 mm
Working length connection 1	31 mm
Length of connection 2	56 mm
Working length connection 2	31 mm
Wrench width	0 mm
Wrench width union nut	0 mm
Tightening torque	30 - 30 Nm
Medium temperature (continuous)	0 - 110 °C

© 2026 Aalberts hfc B.V. All rights reserved. We reserve the right to change designs and technical specifications of our products.

Max. operating pressure at 20 °C	10 bar
Max. operating pressure at max. medium temperature	10 bar
With thermal insulation	No
Ring stiffness class	Other
Standard Dimension Ratio (SDR)	0
With sealing rings/gaskets	No
Capped	No
With connection indicator	No
With drain valve	No
With de-aerator	No
FM quality mark	No
LPCB quality mark	No
ULC quality mark	No
UL quality mark	No
DIN-CERTCO certificate	No
VdS quality mark	No
With approval for TÜV	No
DVGW quality mark for gas	Yes
DVGW quality mark for water	Yes
Certified according to NF 545	Yes
KIWA certified	Yes
Gastec QA mark	No
KOMO certified	Yes
Gastec QA - AR 214 (H2)	No
Type approval according to BBR/EKS	No
Flange standard	Other
Contour code	TH
Min. medium temperature (continuous)	0 °C
Max. medium temperature (continuous)	70 °C
Gastec QA	Yes
KIWA certified	Yes
VdS quality mark	No
DVGW quality mark	Yes

© 2026 Aalberts hfc B.V. All rights reserved. We reserve the right to change designs and technical specifications of our products.

Find more information online:

Installation and operating instructions
ACS certificate
DVGW certificate (DW-8501CT0387)
DVGW certificate (CW-8501CT0388)
NF certificate
WRAS certificate
PZH certificate
PZH certificate MultiSkin2
PZH certificate MultiSkin4
MultiSkin ÉMI certificate HUN
Certificate MultiSkin RUS
MultiSkin Drinking water certificate HUN
KIWA K90957-08 MultiSkin 4 Piping System
KOMO K90961-08 certificate MultiSkin 4 Piping System
KIWA K110283-01 MultiSkin 2 Piping System
KOMO K110284-02 certificate MultiSkin 2 Piping System
KOMO certificate BioPEX system
KIWA 2305708 KUKreg4.pdf
KOMO certificate BioPert system
7041W DWG
7041W STEP
7041W / 7090W RFA
Leaflet
Greenskin Multilayer press-fit system

Fort Blauwkapel 1
1358 DB, Almere - nl

T +31 20 210 34 97
E nl.info@aalberts-hfc.com
I comap.aalberts-hfc.com/nl

© 2026 Aalberts hfc B.V. All rights reserved. We reserve the right to change designs and technical specifications of our products.