V111049001 - Ball Valve F-M connection & T handle - FM 3/4"

Product Data Sheet 2026/11/22



Description	Ball Valve F-M connection & T handle - FM 3/4"
Order Code	V111049001
GTIN	3430650348233
Model	6826 - Ball Valve F-M connection & T handle
DN	DN20
Connection	G 3/4" F/M
PN	PN30

* M = male thread, F = female thread (Iso 228-1)

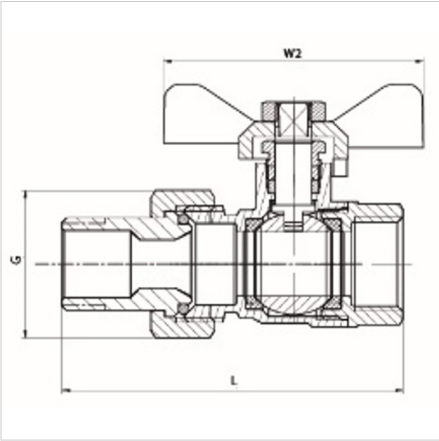

© 2026 Aalberts hfc B.V. All rights reserved. We reserve the right to change designs and technical specifications of our products.

Dimensions Ball Valve F-M connection & T handle - 6826

Type	Dimensions		
	L [mm]	W2 [mm]	G [mm]
Ball Valve F-M connection & T handle - FM 1/2"	73,5	54	33,5
Ball Valve F-M connection & T handle - FM 3/4"	84,5	54	41,0
Ball Valve F-M connection & T handle - FM 1"	91,6	71	51,5
Ball Valve F-M connection & T handle - FM 1 1/4"	109,5	71	59,0

© 2026 Aalberts hfc B.V. All rights reserved. We reserve the right to change designs and technical specifications of our products.

Classification General Data

Etim Group	Flow control valves
Etim Class	Ball valve
Product Name	6826 Ball Valve COMAP F-M connection & T handle 3/4"
Brand	Comap
Product Type	Comap Valves
Order Code	V111049001
GTIN	3430650348233

Attributes

Housing material	Brass
Material quality	Other
Surface protection housing	Nickel-plated
Material ball seal	Polytetrafluoroethylene (PTFE)
Material ball	Brass
Material spindle	Brass
Material secondary spindle seal	Polytetrafluoroethylene (PTFE)
Nominal diameter connection 1	3/4 inch (20)
Outer pipe diameter connection 1	20 mm
Connection 1	Internal thread cylindrical BSPP-G (ISO 228-1)
With coupling connection 1	No
Nominal diameter connection 2	3/4 inch (20)
Outer pipe diameter connection 2	20 mm
Connection 2	External thread cylindrical BSPP-G (ISO 228-1)
With coupling connection 2	Yes
Sealing	Other
Article compression class	Other
Flange compression class	Other
With drain valve	No
With drain possibility (connection)	No
With non-return valve	No
With filter	No
With thermometer	No
Model	Straight
FM quality mark	No
UL quality mark	No
ULC quality mark	No
LPCB quality mark	No
Fire-safe	No
Max. pressure difference at 20 °C	30 bar
Medically clean	No
Grease-free	No
Operation	Other
Housing construction	Other
Full bore	Yes
Length of connection 1	12.5 mm
Working length connection 1	12.5 mm
Length of connection 2	11 mm
Working length connection 2	11 mm
Handle height	19 mm
Handgrip length	54 mm
Angle of the valve	180 °
VdS quality mark	No
DVGW quality mark for gas	No
DVGW quality mark for water	No
KIWA certified	No

© 2026 Aalberts hfc B.V. All rights reserved. We reserve the right to change designs and technical specifications of our products.

Type approval according to BBR/EKS	No
Housing material	Brass
Nominal diameter	3/4 inch (20)
With drain	No
KIWA certified	Yes
Gastec QA	No
Permitted by NCP	No
VdS quality mark	No
Max. medium temperature (continuous)	90 °C
Min. medium temperature (continuous)	5 °C
Surface protection	Nickel-plated
DVGW quality mark	No
Approved according to EN 331	No
DVGW quality mark	No

Find more information online:

Attestation de conformité sanitaire
STEP

Fort Blauwkapel 1
1358 DB, Almere - nl

T +31 20 210 34 97
E nl.info@aalberts-hfc.com
I comap.aalberts-hfc.com/nl

© 2026 Aalberts hfc B.V. All rights reserved. We reserve the right to change designs and technical specifications of our products.