V111009001 - Ball Valve F-F lever - FF 2 1/2"

Product Data Sheet 2026/11/22



Ball Valves can be used in water distribution (potable and not), heating and air conditioning systems.
Made in quality raw material including CW617N brass and PTFE, our Ball valves are reliable and sturdy to perform accurate shutoff even years after installation.

Advantages

Benefits

- Reversible handle.

Quality and security

- High temperature resistant.
- Ball, body, and cover in high quality brass CW617N.
- External nickel plating to protect against corrosion.
- Water-tightness stem with tightenable packing gland.
- Threads according ISO 228.
- Traceability (body and handle Comap marked).
- 5 years warranty.
- ACS (French drinking water approval).

Technical Specifications

- Maximum working pressure Pression (at 18°C):

DN > 2'' = 16 bar.
DN ≤ 2'' = 30 bar.

- Max. temperature : -5°C to 90°C (up to 110°C max for 1 h).

Description	Ball Valve F-F lever - FF 2 1/2"
Order Code	V111009001
GTIN	3430650347830
Model	640 - Ball Valve F-F lever
DN	DN65
Connection	G 2 1/2" F/F
PN	PN16

* M = male thread, F = female thread (Iso 228-1)

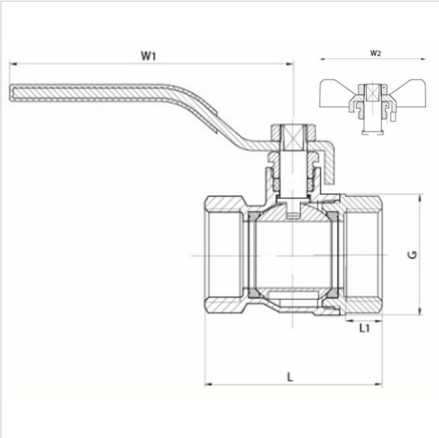

© 2026 Aalberts hfc B.V. All rights reserved. We reserve the right to change designs and technical specifications of our products.

Dimensions Ball Valve F-F lever - 640

Type	Dimensions			
	L [mm]	L1 [mm]	W1/W2 [mm]	G [mm]
Ball Valve F-F lever - FF 1/4"	40,0	8,0	75	23,5
Ball Valve F-F lever - FF 3/8"	40,0	8,0	75	23,5
Ball Valve F-F lever - FF 1/2"	48,0	10,5	95	28,5
Ball Valve F-F lever - FF 3/4"	56,0	11,5	95	36,0
Ball Valve F-F lever - FF 1"	65,0	13,0	104	43,5
Ball Valve F-F lever - FF 1 1/4"	82,0	14,0	130	52,0
Ball Valve F-F lever - FF 1 1/2"	91,5	15,5	130	62,5
Ball Valve F-F lever - FF 2"	100,0	16,0	148	78,0
Ball Valve F-F lever - FF 2 1/2"	140,0	22,0	250	98,0
Ball Valve F-F lever - FF 3"	146,0	25,0	250	114,0

© 2026 Aalberts hfc B.V. All rights reserved. We reserve the right to change designs and technical specifications of our products.

Classification General Data

Etim Group	Flow control valves
Etim Class	Ball valve
Product Name	640 Ball Valve COMAP F-F lever 2"1/2
Brand	Comap
Product Type	Comap Valves
Order Code	V111009001
GTIN	3430650347830

Attributes

Housing material	Brass
Material quality	Other
Surface protection housing	Nickel-plated
Material ball seal	Polytetrafluoroethylene (PTFE)
Material ball	Brass
Material spindle	Brass
Material secondary spindle seal	Polytetrafluoroethylene (PTFE)
Nominal diameter connection 1	2 1/2 inch (65)
Outer pipe diameter connection 1	65 mm
Connection 1	Internal thread cylindrical BSPP-G (ISO 228-1)
With coupling connection 1	No
Nominal diameter connection 2	2 1/2 inch (65)
Outer pipe diameter connection 2	65 mm
Connection 2	Internal thread cylindrical BSPP-G (ISO 228-1)
With coupling connection 2	No
Sealing	Other
Article compression class	Other
Flange compression class	Other
With drain valve	No
With drain possibility (connection)	No
With non-return valve	No
With filter	No
With thermometer	No
Model	Straight
FM quality mark	No
UL quality mark	No
ULC quality mark	No
LPCB quality mark	No
Fire-safe	No
Max. pressure difference at 20 °C	16 bar
Medically clean	No
Grease-free	No
Housing construction	Other
Full bore	Yes
Length of connection 1	70 mm
Working length connection 1	22 mm
Length of connection 2	70 mm
Working length connection 2	22 mm
Handle height	19 mm
Handgrip length	250 mm
Angle of the valve	180 °
VdS quality mark	No
DVGW quality mark for gas	No
DVGW quality mark for water	No
KIWA certified	No
Type approval according to BBR/EKS	No
Housing material	Brass

© 2026 Aalberts hfc B.V. All rights reserved. We reserve the right to change designs and technical specifications of our products.

Nominal diameter	2 1/2 inch (65)
With drain	No
KIWA certified	Yes
Gastec QA	No
Permitted by NCP	No
VdS quality mark	No
Max. medium temperature (continuous)	90 °C
Min. medium temperature (continuous)	5 °C
Surface protection	Nickel-plated
DVGW quality mark	No
Approved according to EN 331	No
DVGW quality mark	No

Find more information online:

Attestation de conformité sanitaire

–

Fort Blauwkapel 1
1358 DB, Almere - nl

T +31 20 210 34 97
E nl.info@aalberts-hfc.com
I comap.aalberts-hfc.com/nl

© 2026 Aalberts hfc B.V. All rights reserved. We reserve the right to change designs and technical specifications of our products.